Operation

Tandem Supply Systems

313528E

EN

For use with non-heated bulk supply of medium to high viscosity sealants and adhesive materials. For professional use only.

Not for use in explosive atmospheres.

125 psi (0.9 MPa, 9 bar) Maximum Air Inlet Pressure - S20 3 in. rams
150 psi (1.0 MPa, 10 bar) Maximum Air Inlet Pressure - D60 and D200 3 in. rams
125 psi (0.9 MPa, 9 bar) Maximum Air Inlet Pressure - D200S 6.5 in. rams

Important Safety Instructions
Read all warnings and instructions in this manual.
Save these instructions.

US Patent Pending

The Graco Control Architecture Electric Components are Listed in Intertek's Directory of Listed Products.

D200 Rams with Electronic Crossover Shown

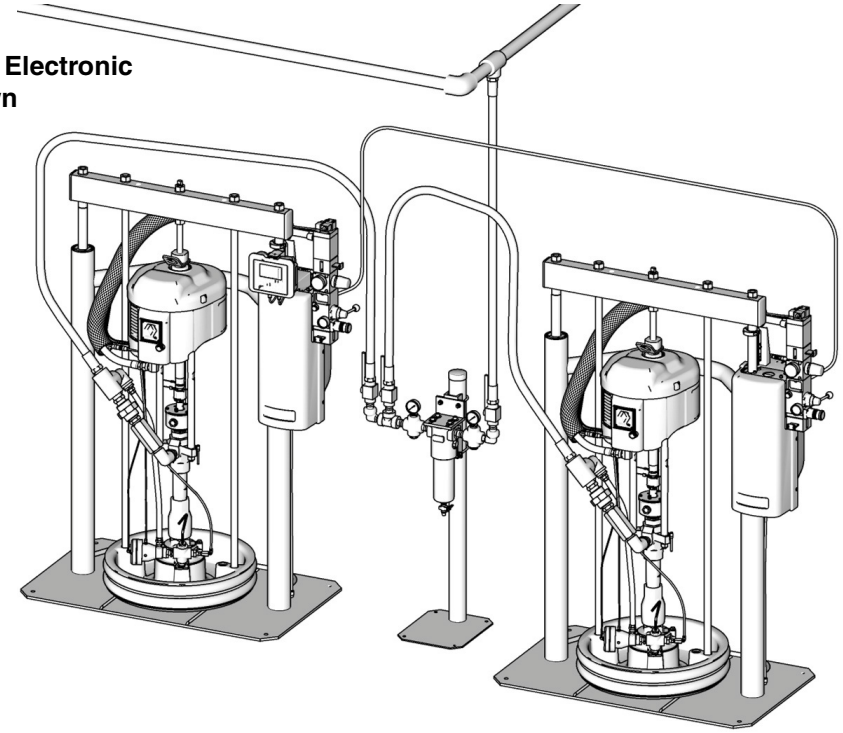

TI10865A

PROVEN QUALITY. LEADING TECHNOLOGY.

Contents

Related Manuals 3
Translations 3
Models 4
Warnings 8
Overview 10
System Description 10
Ram Installation and Setup 10
Fluid Filter Kit Installation 10
Grounding 11
Integrated Air Controls 11
Pneumatic Crossover System Components . . . 12
Electronic Crossover System Components 14
255468 Light Tower Accessory 16
Communications Gateway Module 16
CGM Status LED Signals 16
Display Module (Electronic Crossover Systems) 17
Fluid Control Module 21
Electronic Crossover Operation 22
Pressure Relief Procedure 22
Flush Before Using Equipment 22
Startup 22
Prime 24
Automatic Crossover 25
Manual Crossover 25
Recirculate Function 26
Depressurize Function 26
Shutdown 27
Alarms 28
Diagnose Alarms 28
Clear Alarms 28
Alarm Codes and Troubleshooting 28
Appendix A - User Interface Display 31
Display Overview 31
Display Details 31
Setup Mode Screens 33
Run Mode Screens 38
Fluid Filter Kit Dimensions 44
Technical Data 45
Graco Standard Warranty 46
Graco Information 46

Related Manuals

Component Manuals in U.S. English:

Manual	Description
313529	Tandem Supply Systems Repair-Parts
313526	Supply Systems Operation
313527	Supply Systems Repair-Parts
312375	Check-Mate® Displacement Pumps Instructions-Parts
312376	Check-Mate® Pump Packages Instruction-Parts
311827	Dura-Flo™ Displacement Pumps (145cc, 180cc, 220cc, 290cc) Instructions-Parts Manual
311825	Dura-Flo™ Displacement Pumps (430cc, 580cc) Instructions-Parts Manual
311717	Carbon Steel Displacement Pump (1000cc) Instructions-Parts Manual
311828	Dura-Flo™ Pump Packages (145cc, 180cc, 220cc, 290cc) Instructions-Parts Manual
311826	Dura-Flo™ Pump Packages (430cc, 580cc) Instructions-Parts Manual
311833	Two-Ball NXT™ Pump Packages (1000cc) Instructions-Parts Manual
312889	60 cc Check-Mate Displacement Pump Repair Parts Manual
312467	100 cc Check-Mate Displacement Pump Repair Parts Manual
312468	200 cc Check-Mate Displacement Pump Repair Parts Manual
312469	250 cc Check-Mate Displacement Pump Repair Parts Manual
312470	500 cc Check-Mate Displacement Pump Repair Parts Manual
311238	NXT™ Air Motor (Nxxxxx models) Instructions-Parts
312796	NXT™ Air Motor (Mxxxxx models) Instructions-Parts
308213	Premier® Air Motor Instructions-Parts
312374	Air Controls Instructions-Parts
312491	Pump Fluid Purge Kit
312492	Drum Roller Kit Instruction
312493	Light Tower Kit Instruction
312864	Communications Gateway Module, Instructions-Parts
313138	Supply System Communications Gateway Module Installation Kit, Instructions-Parts
406681	Platen Cover Kit

Translations

This manual is available in the following languages. See the following chart for specific languages and corresponding part numbers.

Manual	Language
313926	Chinese
313923	French
313924	German
313929	Italian
313927	Japanese
313928	Korean
313925	Spanish

Models

Check the identification plate (ID) for the 6-digit part number of your tandem system. Use the following matrix to define the construction of your system, based on the six digits. For example, Tandem Part No. **TC2414** represents a Check-Mate tandem system (**TC**), pump (**24**), crossover option (**1**), and platen/ram option (**4**).

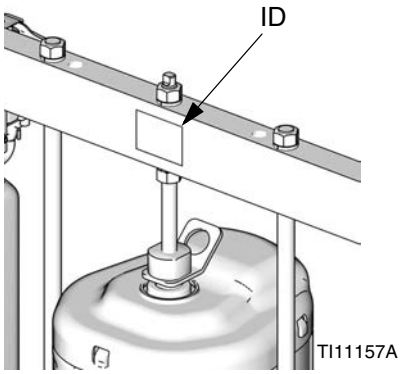

NOTE:
Systems with the **TD** as the first and second digits are Dura-Flo tandem systems. Some configurations in the following matrix cannot be built. See the Product Selection Guide for available systems.

To order replacement parts, see **Parts** section in manual 313529. The digits in the matrix do not correspond to the Ref. Nos. in the Parts drawings and lists.

TC	24	1							4
First and Second Digit	**Third and Fourth Digit**	**Fifth Digit**							**Sixth Digit**
		Crossover Options							**Platen/Ram Options**
			Electronic Crossover (Smart Motors only)	**Pneumatic Crossover (Standard Motors only)**	**Fluid Filter**	**Depressurize/ Recirculate Valve Material**			
						Carbon Steel	**SST**		
	Pump Code							**Ram Size**	**See Table 1 for Selections**
TC (Tandem System with Check-Mate displacement pump)	(See Table 2 for 2-digit Check-Mate pump code)	**1**	✔		✔	✔		n/a	
		2	✔		✔		✔	n/a	
		3	✔		✔			n/a	
		4	✔			✔		n/a	
		5	✔				✔	n/a	
		6	✔					n/a	
TD (Tandem System with Dura-Flo displacement pump)	(See Table 3 for 2-digit Dura-Flo pump code)	**7**		✔				S20, D60, D200, (3 in.)	
		8		✔				D200S, (6.5 in.)	

All supply systems with DataTrak and 24 Vdc or 100-240 Vac power supplies are ETL approved.

Recognized Component
INTERTEK
C ETL US
LISTED
110474
Certified to CAN/CSA CSA-C22.2 No. 14-05
Conforms to UL 508

Table 1: Platen/Ram Options

Sixth Digit	Platen Size	Platen Style	Platen Material	Seal Material	Ram Size	Voltage
2	20 L (5 Gal)	Flat, Single Wiper	CS	Polyurethane	S20, 3 in.	none
3	20 L (5 Gal)	Flat, Single Wiper	SST	PTFE-Coated Nitrile	S20, 3 in	none
7	20 L (5 Gal)	Flat, Dual Wiper	CS	Polyurethane	D60, 3 in.	none
8	20 L (5 Gal)	Flat, Dual Wiper	CS	Polyurethane	D60, 3 in.	120 Vdc
9	20 L (5 Gal)	Flat, Dual Wiper	CS	Polyurethane	D60, 3 in.	24 Vdc
0	30 L (8 Gal)	Flat, Single Wiper	SST	PTFE-Coated Nitrile	D60, 3 in.	none
D	30 L (8 Gal)	Flat, Single Wiper	SST	PTFE-Coated Nitrile	D60, 3 in.	120 Vdc
E	30 L (8 Gal)	Flat, Single Wiper	SST	PTFE-Coated Nitrile	D60, 3 in.	24 Vdc
K	30 L (8 Gal)	Flat, Dual Wiper	CS	Polyurethane	D60, 3 in.	none
N	30 L (8 Gal)	Flat, Dual Wiper	CS	Polyurethane	D60, 3 in.	120 Vdc
P	30 L (8 Gal)	Flat, Dual Wiper	CS	Polyurethane	D60, 3 in.	24 Vdc
U	60 L (16 Gal)	Flat, Single Wiper	SST	PTFE-Coated Nitrile	D60, 3 in.	none
V	60 L (16 Gal)	Flat, Single Wiper	SST	PTFE-Coated Nitrile	D60, 3 in.	120 Vdc
W	60 L (16 Gal)	Flat, Single Wiper	SST	PTFE-Coated Nitrile	D60, 3 in.	24 Vdc
X	60 L (16 Gal)	Flat, Dual Wiper	CS	Polyurethane	D60, 3 in.	none
Y	60 L (16 Gal)	Flat, Dual Wiper	CS	Polyurethane	D60, 3 in.	120 Vdc
Z	60 L (16 Gal)	Flat, Dual Wiper	CS	Polyurethane	D60, 3 in.	24 Vdc
4	115L (30 Gal)	D Style	CS	EPDM	D200, 3 in.	none
1	20 L (5 Gal)	Flat, Single Wiper	SST	PTFE-Coated Nitrile	D200, 3 in.	none
6	20 L (5 Gal)	Flat, Dual Wiper	CS	Polyurethane	D200, 3 in	none
A	200 L (55 Gal)	Dual O-ring	AL	PTFE-Coated EPDM	D200, 3 in.	none
B	200 L (55 Gal)	Dual O-ring	AL	PTFE-Coated EPDM	D200, 3 in.	120 Vdc
C	200 L (55 Gal)	Dual O-ring	AL	PTFE-Coated EPDM	D200, 3 in.	24 Vdc
F	200 L (55 Gal)	Dual O-ring	AL	PTFE-Coated EPDM	D200S, 6.5 in.	none
G	200 L (55 Gal)	Dual O-ring	AL	PTFE-Coated EPDM	D200S, 6.5 in.	120 Vdc
H	200 L (55 Gal)	Dual O-ring	AL	PTFE-Coated EPDM	D200S, 6.5 in.	24 Vdc
J	200 L (55 Gal)	Dual O-ring	AL	EPDM	D200, 3 in.	none
L	200 L (55 Gal)	Dual O-ring	AL	EPDM	D200, 3 in.	120 Vdc
M	200 L (55 Gal)	Dual O-ring	AL	EPDM	D200, 3 in.	24 Vdc
R	200 L (55 Gal)	Dual O-ring	AL	EPDM	D200S, 6.5 in.	none
S	200 L (55 Gal)	Dual O-ring	AL	EPDM	D200S, 6.5 in.	120 Vdc
T	200 L (55 Gal)	Dual O-ring	AL	EPDM	D200S, 6.5 in.	24 Vdc

Table 2: Check-Mate Pump Identification Code/Part No. Index

Pump Code	Pump Part No. (see manual 312376)
NXT 200/CM 60	
4A	P05LCS
4B	P05LCM
4C	P05LSS
4F	P05LSM
NXT 400/CM 60	
6A	P11LCS
6B	P11LCM
6C	P11LSS
6F	P11LSM
6G	P11RCS
6H	P11RCM
6J	P11RSS
6K	P11RSM
61	P11SCS
62	P11SCM
63	P11SSS
64	P11SSM
NXT 700/CM 60	
7A	P20LCS
7B	P20LCM
7C	P20LSS
7F	P20LSM
7G	P20RCS
7H	P20RCM
7J	P20RSS
7K	P20RSM
71	P20SCS
72	P20SCM
73	P20SSS
74	P20SSM
NXT 1200/CM 60	
8A	P38LCS
8B	P38LCM
8C	P38LSS
8F	P38LSM
8G	P38RCS
8H	P38RCM
8J	P38RSS
8K	P38RSM

Pump Code	Pump Part No. (see manual 312376)
81	P38SCS
82	P38SCM
83	P38SSS
84	P38SSM
NXT 1800/CM 60	
9A	P61LCS
9B	P61LCM
9C	P61LSS
9F	P61LSM
9G	P61RCS
9H	P61RCM
9J	P61RSS
9K	P61RSM
91	P61SCS
92	P61SCM
93	P61SSS
94	P61SSM
NXT 2200/CM 100	
11	P40LCS
12	P40LCM
1F	P40LSS
1G	P40LSM
13	P40RCS
14	P40RCM
1H	P40RSS
1J	P40RSM
10	P40SSS
1A	P40SSM
19	P40SCS
NXT 3400/CM 100	
15	P63LCS
16	P63LCM
1T	P63LSS
1U	P63LSM
17	P63RCS
18	P63RCM
1W	P63RSS
1Y	P63RSM
1B	P63SSS
1C	P63SSM

Pump Code	Pump Part No. (see manual 312376)
NXT 2200/CM 200	
21	P23LCS
22	P23LCM
23	P23RCS
24	P23RCM
25	P23LSS
26	P23LSM
27	P23RSS
28	P23RSM
NXT 3400/CM 200	
29	P36LCS
2A	P36LCM
2B	P36RCS
2C	P36RCM
2F	P36LSS
2G	P36LSM
2H	P36RSS
2J	P36RSM
NXT 6500/CM 200	
2L	P68LCS
2M	P68LCM
2R	P68RCS
2S	P68RCM
2T	P68LSS
2U	P68LSM
2W	P68RSS
2Y	P68RSM
20	P68SCS
NXT 3400/CM 250	
31	P29LCS
32	P29LCM
33	P29RCS
34	P29RCM
35	P29LSS
36	P29LSM
37	P29RSS
38	P29RSM

Pump Code	Pump Part No. (see manual 312376)
NXT 6500/CM 250	
39	P55LCS
3A	P55LCM
3B	P55RCS
3C	P55RCM
3F	P55LSS
3G	P55LSM
3H	P55RSS
3J	P55RSM
Premier/CM 250	
3L	P82LCS
3M	P82LCM
3R	P82LSS
3S	P82LSM
NXT 3400/CM 500	
51	P14LCS
52	P14LCM
53	P14RCS
54	P14RCM
55	P14LSS
56	P14LSM
57	P14RSS
58	P14RSM
NXT 6500/CM 500	
59	P26LCS
5A	P26LCM
5B	P26RCS
5C	P26RCM
5F	P26LSS
5G	P26LSM
5H	P26RSS
5J	P26RSM
Premier/CM 500	
5L	P39LCS
5M	P39LCM
5R	P39LSS
5S	P39LSM
No Pump	
NN	

Table 3: Dura-Flo Pump Identification Code/Part No. Index

Pump Code	Pump Part No. (see manual 311828)
NXT 2200/DF 145SS	
A1	P31LSS
A3	P31HSS
NXT 3400/DF 145SS	
B1	P46LSS
B3	P46HSS
NXT 3400/DF 180SS	
B5	P41LSS
B7	P41HSS
NXT 3400/DF 220SS	
C1	P30LSS
C3	P30HSS
NXT 6500/DF 220SS	
CA	P57LSS
CC	P57HSS
NXT 6500/DF 290SS	
D1	P45LSS
D3	P45HSS
Premier/DF 290SS	
DL	P67LSS
DR	P67HSS

Pump Code	Pump Part No. (see manual 311826)
NXT 3400/DF 430CS	
E1	P15LCS
E2	P15LCM
E3	P15HCS
E4	P15HCM
NXT 3400/DF 430SS	
E5	P15LSS
E6	P15LSM
E7	P15HSS
E8	P15HSM
NXT 6500/DF 430CS	
E9	P32LCS
EA	P32LCM
EB	P32HCS
EC	P32HCM
NXT 6500/DF 430SS	
EF	P32LSS
EG	P32LSM
EH	P32HSS
EJ	P32HSM
Premier/DF 430	
EL	P44LSS
EM	P44LSM
ER	P44LCS
ES	P44LCM
NXT 3400/DF 580CS	
F1	P12LCS
F2	P12LCM
F3	P12HCS
F4	P12HCM
NXT 3400/DF 580SS	
F5	P12LSS
F6	P12LSM
F7	P12HSS
F8	P12HSM

Pump Code	Pump Part No. (see manual 311826)
NXT 6500/DF 580CS	
F9	P22LCS
FA	P22LCM
FB	P22HCS
FC	P22HCM
NXT 6500/DF 580SS	
FF	P22LSS
FG	P22LSM
FH	P22HSS
FJ	P22HSM
Premier/DF 580CS	
FL	P34LSS
FM	P34LSM
FR	P34LCS
FS	P34LCM

Pump Code	Pump Part No. (see manual 311833)
NXT 3400/DF 1000CS	
G1	P06LCS
G3	P06HCS
NXT 3400/DF 1000SS	
G5	P06LSS
G7	P06HSS
NXT 6500/DF 1000CS	
G9	P10LCS
GB	P10HCS
NXT 6500/DF 1000SS	
GF	P10LSS
GH	P10HSS
Premier/DF 1000	
GL	NR
GM	NR
GR	NR
GS	NR

NR = Not released

Warnings

The following warnings are for the setup, use, grounding, maintenance, and repair of this equipment. The exclamation point symbol alerts you to a general warning and the hazard symbol refers to procedure-specific risk. Refer back to these warnings. Additional, product-specific warnings may be found throughout the body of this manual where applicable.

⚠WARNING

	SKIN INJECTION HAZARD High-pressure fluid from gun, hose leaks, or ruptured components will pierce skin. This may look like just a cut, but it is a serious injury that can result in amputation. **Get immediate surgical treatment.** • Do not point gun at anyone or at any part of the body. • Do not put your hand over the spray tip. • Do not stop or deflect leaks with your hand, body, glove, or rag. • Do not spray without tip guard and trigger guard installed. • Engage trigger lock when not spraying. • Follow **Pressure Relief Procedure** in this manual, when you stop spraying and before cleaning, checking, or servicing equipment.
	MOVING PARTS HAZARD Moving parts can pinch or amputate fingers and other body parts. • Keep clear of moving parts. • Do not operate equipment with protective guards or covers removed. • Pressurized equipment can start without warning. Before checking, moving, or servicing equipment, follow the **Pressure Relief Procedure** in this manual. Disconnect power or air supply.
	FIRE AND EXPLOSION HAZARD Flammable fumes, such as solvent and paint fumes, in **work area** can ignite or explode. To help prevent fire and explosion: • Use equipment only in well ventilated area. • Eliminate all ignition sources; such as pilot lights, cigarettes, portable electric lamps, and plastic drop cloths (potential static arc). • Keep work area free of debris, including solvent, rags and gasoline. • Do not plug or unplug power cords, or turn power or light switches on or off when flammable fumes are present. • Ground all equipment in the work area. See **Grounding** instructions. • Use only grounded hoses. • Hold gun firmly to side of grounded pail when triggering into pail. • If there is static sparking or you feel a shock, **stop operation immediately.** Do not use equipment until you identify and correct the problem. • Keep a working fire extinguisher in the work area.

⚠WARNING

	EQUIPMENT MISUSE HAZARD Misuse can cause death or serious injury. • Do not operate the unit when fatigued or under the influence of drugs or alcohol. • Do not exceed the maximum working pressure or temperature rating of the lowest rated system component. See **Technical Data** in all equipment manuals. • Use fluids and solvents that are compatible with equipment wetted parts. See **Technical Data** in all equipment manuals. Read fluid and solvent manufacturer's warnings. For complete information about your material, request MSDS forms from distributor or retailer. • Check equipment daily. Repair or replace worn or damaged parts immediately with genuine manufacturer's replacement parts only. • Do not alter or modify equipment. • Use equipment only for its intended purpose. Call your distributor for information. • Route hoses and cables away from traffic areas, sharp edges, moving parts, and hot surfaces. • Do not kink or over bend hoses or use hoses to pull equipment. • Keep children and animals away from work area. • Comply with all applicable safety regulations.
	ELECTRIC SHOCK HAZARD Improper grounding, setup, or usage of the system can cause electric shock. • Turn off and disconnect power cord before servicing equipment. • Use only grounded electrical outlets. • Use only 3-wire extension cords. • Ensure ground prongs are intact on sprayer and extension cords. • Do not expose to rain. Store indoors.
	SPLATTER HAZARD During blowoff of platen splatter may occur. • Use minimum drum removal air pressure.
 	TOXIC FLUID OR FUMES HAZARD Toxic fluids or fumes can cause serious injury or death if splashed in the eyes or on skin, inhaled, or swallowed. • Read MSDS's to know the specific hazards of the fluids you are using. • Store hazardous fluid in approved containers, and dispose of it according to applicable guidelines. • Always wear impervious gloves when spraying or cleaning equipment.
	PERSONAL PROTECTIVE EQUIPMENT You must wear appropriate protective equipment when operating, servicing, or when in the operating area of the equipment to help protect you from serious injury, including eye injury, inhalation of toxic fumes, burns, and hearing loss. This equipment includes but is not limited to: • Protective eyewear • Clothing and respirator as recommended by the fluid and solvent manufacturer • Gloves • Hearing protection

Overview

System Description

Each tandem supply system consists of two air-powered rams; both of which are always the same size. Each ram drives a Check-Mate pump and a platen into a drum of material. The pump removes material from the drum and pushes it through a supply hose to a customer-supplied header. Material flows through the header to individual dispense drops.

When one drum is emptied the system performs an automatic crossover, shutting off the air supply to the pump on the empty ram and activating the pump on the full ram.

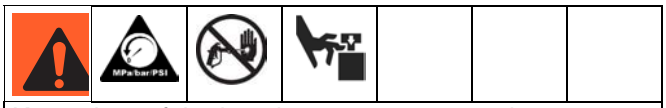

Keep clear of the inactive ram, as automatic crossover may occur unexpectedly. To repair or adjust the ram, first follow all steps of the **Pressure Relief Procedure** on page 22.

Ram Installation and Setup

1. Install and set up individual rams as explained in manual 313526 (supplied).

NOTE:
See FIG. 2 on page 13 (for pneumatic crossover systems) and FIG. 3 on page 15 (for electronic crossover systems) for examples.

2. Connect pneumatic line (AC) or CAN cable (X) between rams.

Fluid Filter Kit Installation

Some systems include a fluid filter kit. See **Appendix A - User Interface Display** on page 31. Ensure that the fluid filter stand base is level in all directions. If necessary, level the base using metal shims. Secure the base to the floor using anchors that are long enough to prevent the filter stand from tipping.

1. Connect pressure sensor cable from the fluid filter kit to port 7 of the fluid control module.
2. Connect male side of the splitter to the other end of the pressure sensor cable.
3. Connect end of splitter cable labeled #1 to the pressure sensor on the outlet side of the filter.
4. Connect end of splitter cable labeled #2 to the pressure sensor on the inlet side of the filter.

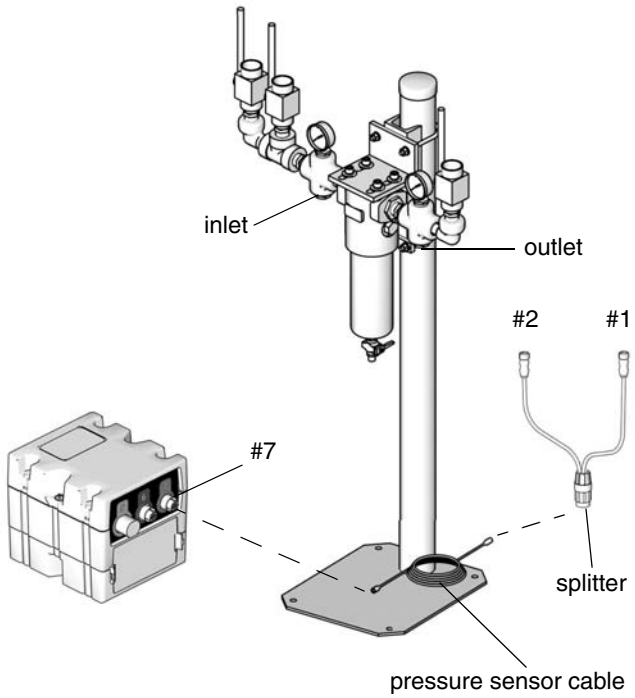

Grounding

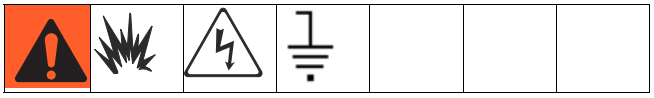

The equipment must be grounded. Grounding reduces the risk of static and electric shock by providing an escape wire for the electrical current due to static build up or in the event of a short circuit.

Pump: use ground wire and clamp (supplied). Loosen grounding lug locknut and washer. Insert ground wire end into lug slot and tighten locknut securely. Connect ground clamp to a true earth ground.

Air and fluid hoses: use only electrically conductive hoses with a maximum of 500 ft. (150 m) combined hose length to ensure grounding continuity. Check electrical resistance of hoses. If total resistance to ground exceeds 29 megohms, replace hose immediately.

Air compressor: follow manufacturer's recommendations.

Dispense valve: ground through connection to a properly grounded fluid hose and pump.

Fluid supply container: follow local code.

Solvent pails used when flushing: follow local code. Use only conductive metal pails, placed on a grounded surface. Do not place the pail on a nonconductive surface, such as paper or cardboard, which interrupts grounding continuity.

To maintain grounding continuity when flushing or relieving pressure: hold metal part of the dispense valve firmly to the side of a grounded metal pail, then trigger the valve.

Integrated Air Controls

The integrated air controls include:

- **Main air slider valve (BA):** turns air on and off to the system. When closed, the valve relieves pressure downstream.
- **Ram air regulator (BB):** controls ram up and down pressure and blowoff pressure.
- **Ram director valve (BC):** controls ram direction.
- **Exhaust port with muffler (BD)**
- **Air motor regulator (BE):** Controls air pressure to motor.
- **Air motor slider valve (BF):** turns air on and off to the air motor. When closed, the valve relieves air trapped between it and the air motor. Push the valve in to shutoff. **Remote DataTrak:** The air solenoid (Y, FIG. 2), the air motor slider valve (BF), and the main air slider valve (BA) must be open for air to flow. (See Remote DataTrak Setup section in Supply Systems operation manual 313526.)
- **Blowoff button (BG):** turns air on and off to push the platen out of an empty drum.

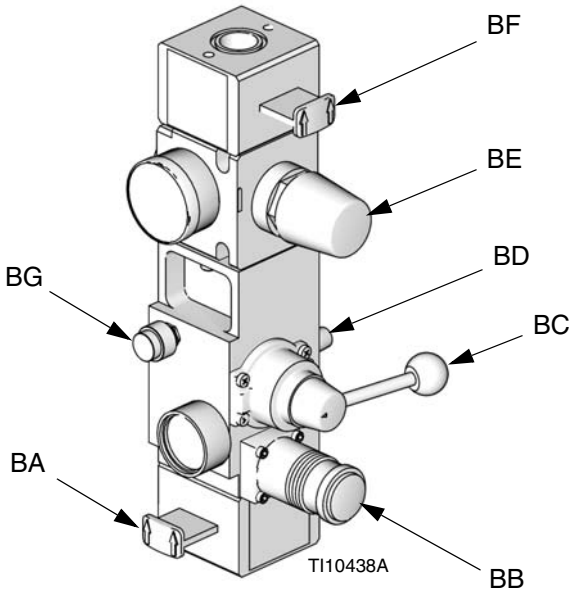

FIG. 1. Integrated Air Controls

Air Line Accessories

See FIG. 2.

- **Air line drain valve (U)**
- **Air line filter (V):** removes harmful dirt and moisture from compressed air supply.
- **Second bleed-type air valve (W):** isolates air line accessories and supply system for servicing. Locate upstream from all other air line accessories.
- **Air relief valve** (attached to ram air regulator, not visible): automatically relieves excessive pressure.

Pneumatic Crossover System Components

NOTE:
D200, D60, and S20 sizes are used in pneumatic crossover systems.

FIG. 2. shows a pneumatic crossover system. Refer to manual 313526 (supplied) for ram installation and operating instructions. The pneumatic crossover operates as follows:

During system operation, as the ram approaches the drum bottom, the top of the ram contacts the limit switch (E). The limit switch shuts off air to the air motor via a solenoid valve (Y), which stops air flow to one motor and starts air flow to the other air motor. This allows continuous material flow and changing of material drums.

The position of the limit switch (E) on the ram determines when the air motor is turned off. Start by positioning the limit switch to trip when the ram platen (D) is 1 in. (25 mm) from the bottom of the drum. During operation the position may be adjusted as desired.

The bypass valve (L) allows you to prime the inactive pump after a drum change. Open the valve to prime the pump. Close the valve when priming is complete, and during normal operation.

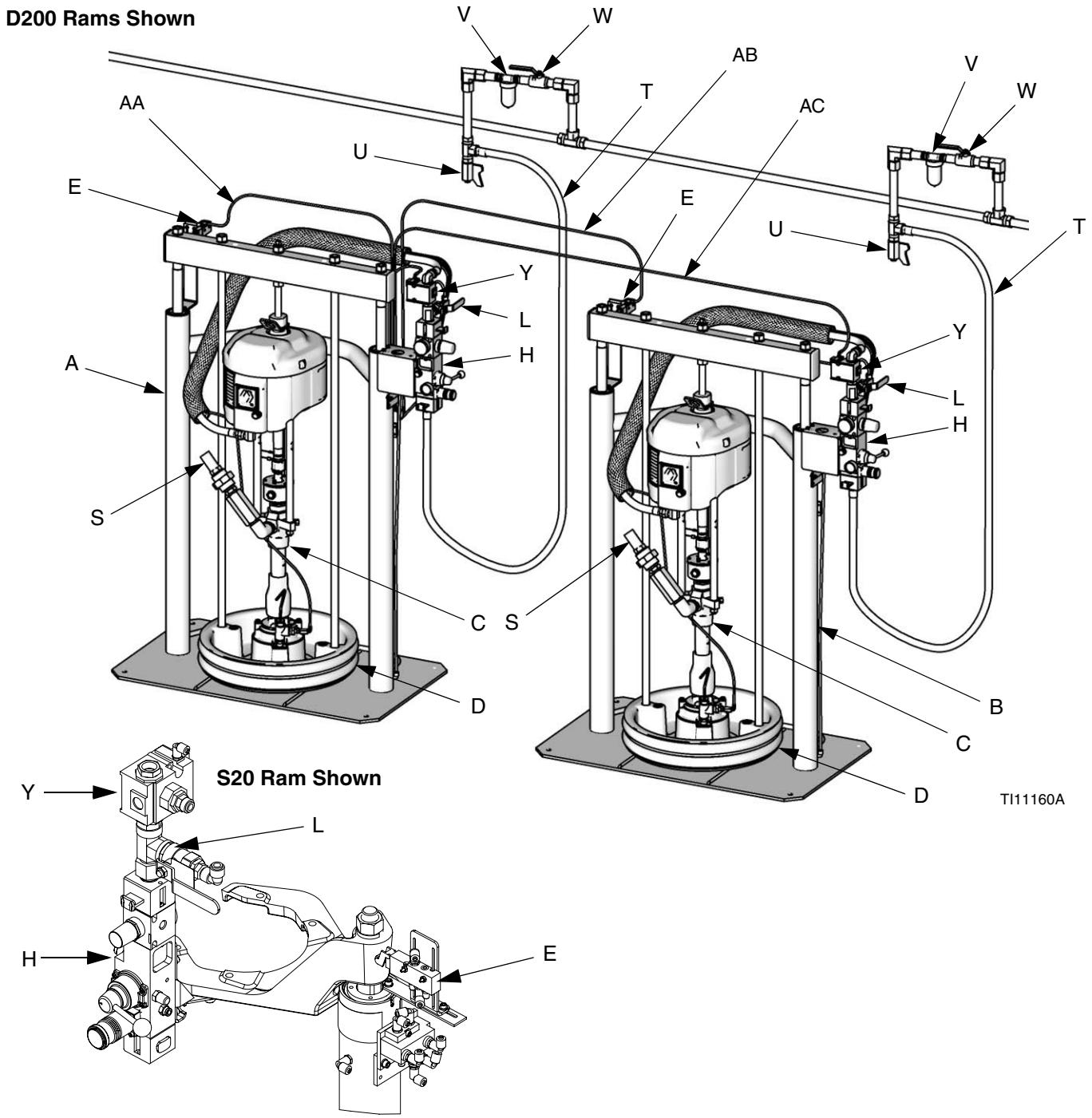

FIG. 2: Component Identification, Pneumatic Crossover

Key to FIG. 2:

A Ram A
B Ram B
C Pump (Ram A and B)
D Platen (Ram A and B)
E Limit Switch (Ram A and B)
H Integrated Air Controls (Ram A and B); see page 11
L Bypass Valve (Ram A and B)
S Fluid Line (not supplied)
T Main Air Line (not supplied)
U Air Line Drain Valve (not supplied)
V Air Filter (not supplied)
W Bleed-Type Air Shutoff Valve (not supplied)
Y Solenoid Valve (Ram A and B)
AA Cable from Ram A to Limit Switch A
AB Cable from Ram A to Limit Switch B
AC Main Crossover Cable; from Ram A to Solenoid B

Electronic Crossover System Components

NOTE:
D200 and D60 sizes are used in electronic crossover systems. See FIG. 3. Before you install the system, you should be familiar with the following components.

NOTE:
Reference numbers and letters in parentheses in the text refer to the callouts in the figures.

Both rams (A and B) include a Check-Mate Pump (C), platen (D), integrated air controls (H), drum empty sensor (E), and fluid control module (G).

Only Ram A includes the display module (F) and power supply box (K).

Drum empty sensor (E). Signals drum empty condition.

Display module (F). Mounted on Ram A only. Provides Run Mode status screens, Setup screens, and control keys.

Fluid control module (G). See page 21.

Integrated air controls (H). See page 11.

Power supply box (K).

Air motor solenoid (Y). Solenoid is on when system is on and in Run Mode, Recirculate Mode, or Prime Mode. Solenoid is off when system is shut off or when in Depressurize Mode, or the ram is in an Inactive Ready Mode. Turns on in Recirculate Mode. The solenoid LED will illuminate when the solenoid is on.

Depressurize/recirculate fluid valve (Z). Depressurizes system when Depressurize Mode is active. Recirculates fluid when Recirculate Mode is active.

To depressurize the system, press the Depressurize key on the display module and select Yes when asked if you want to depressurize the system. Follow the **Pressure Relief Procedure** on page 22. Shutting off power or removing power from the system will not depressurize the system.

D200 Rams Shown

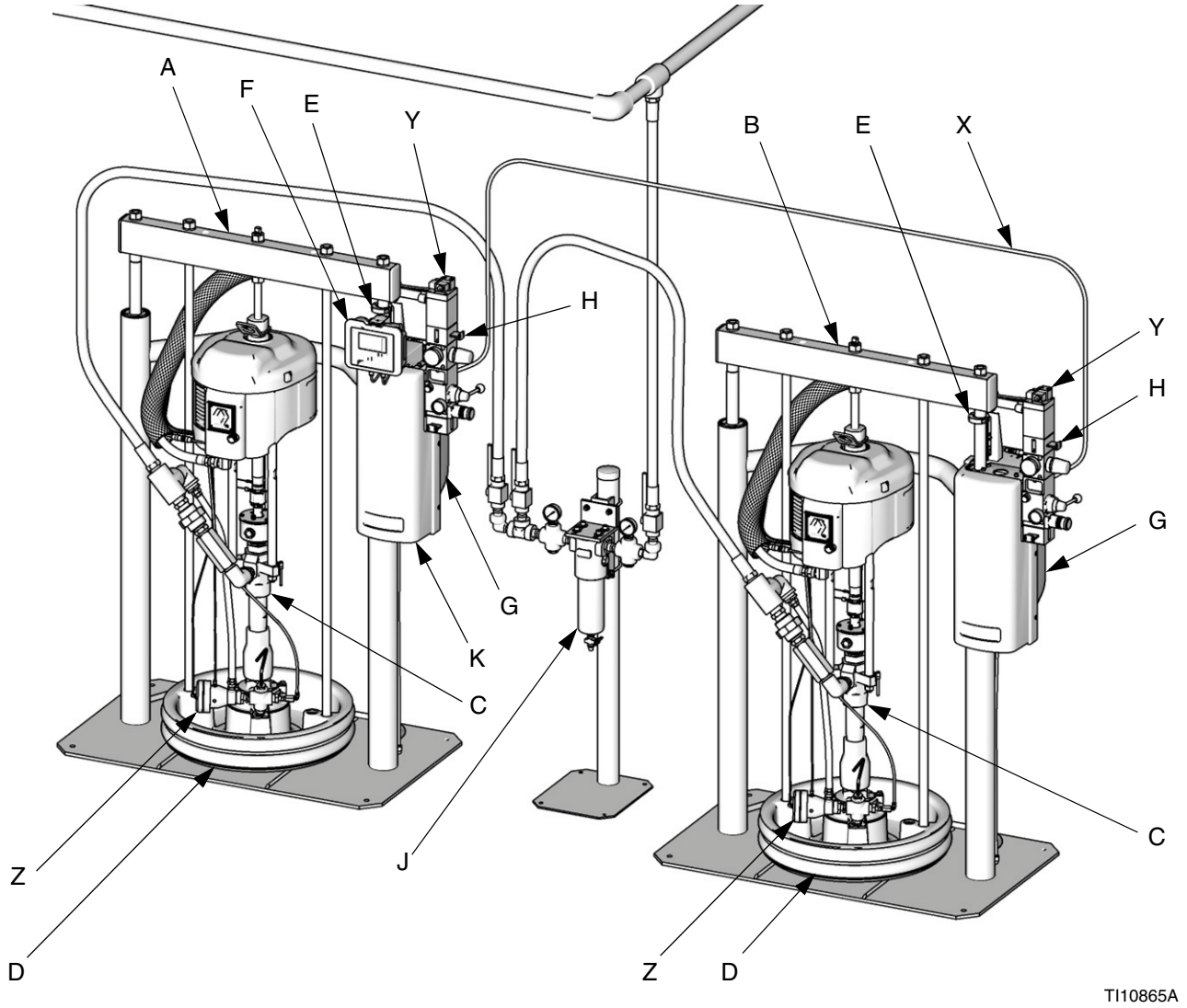

FIG. 3: Component Identification, Electronic Crossover

Key to FIG. 3:

A Ram A
B Ram B
C Pump (Ram A and B)
D Platen (Ram A and B)
E Drum Empty Sensor (partially hidden; Ram A and B)
F Display Module (Ram A only)
G Fluid Control Module (behind rear shroud, Ram A and B)
H Integrated Air Controls (Ram A and B); see page 11
J Fluid Filter and Stand
K Power Supply Box (behind shroud, Ram A only)
X CAN Communication Cable
Y Air Motor Solenoid (Ram A and B)
Z Depressurize/Recirculate Fluid Valve (Ram A and B)

255468 Light Tower Accessory

Order the 255468 Light Tower Accessory as a diagnostic indicator for tandem supply systems. Refer to Light Tower Kit manual for installation instructions. See Table 4 for a description of light tower signals.

Table 4: Light Tower Signals

Signal	Description
Green on only	System is powered up and there are no error conditions present.
Yellow flashing	A low priority error exists.
Yellow on	A medium priority error exists.
Red flashing	A high priority error exists.
Red on	The system is shut down due to error conditions.

Communications Gateway Module

The Communications Gateway Module (CGM) provides a control link between Graco Control Architecture based systems and a selected fieldbus. This provides the means for remote monitoring and control by external automation systems.

Data provided by the CGM to the fieldbus depends on which Graco Control Architecture based system and fieldbus are connected. A data map supplied on a map token is defined for this pairing. Once the data map has been loaded into the CGM, it is stored internally, and the map token is no longer required for operation.

CGM Status LED Signals

Signal	Description
Green on	System is powered up
Yellow	Internal communication in progress
Red Solid	CGM hardware failure
*Red (7 flashes)	Data map load failure
	Incorrect data map for fieldbus type
	No data map loaded

*The red LED (F) will flash a code, pause, then repeat. See for diagnostic information in CGM manual 312864.

NOTE: Verify that you are using the correct token for your system and reinstall token. If fails, order new token.

Display Module (Electronic Crossover Systems)

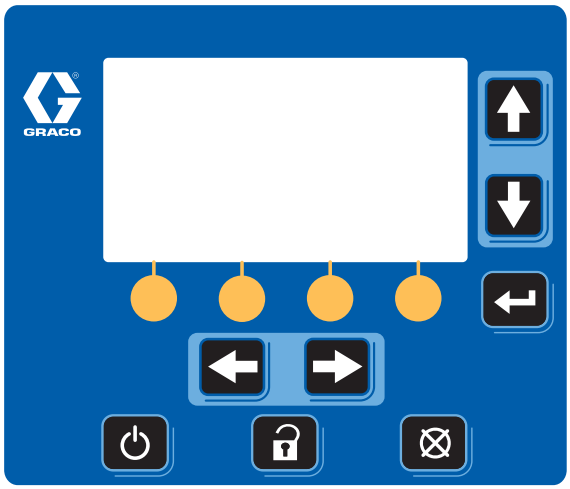

FIG. 4: Display Module

Table 5: Display Module Button Functions

Key	Function
System On/Off	Powers air motor solenoid ON and OFF from Ram Operation screen (FIG. 29, page 38).
	• When ON, the air motor solenoid is ON and the pump of the active ram is pressurized.
	• When OFF, the air motor solenoids are OFF.
	CAUTION: Turning the air motor solenoid OFF relieves pressure from the pump motor. It does not depressurize the fluid pressure. Follow the **Pressure Relief Procedure**, page 22.
	NOTE: The ram up/down and blowoff air is independent of the electronic controls and can be operated anytime the main air slider valve is open and air pressure is available.
Cancel	Cancel a selection or number entry while in the process of entering a number or making a selection.
Setup	Toggle between run and setup screens.
	• Setup changes can be made while system is operating.
	• If setup screens are password protected, button toggles between run and password entry screen.
Enter	Opens drop down menus on Setup fields.
	Press to enter changes and make a selection.
Arrows Left/Right	Navigate left or right to a new screen. Navigate left or right within a screen while in Jump In mode. See **Appendix A - User Interface Display**, page 31, for more information.
Arrows Up/Down	Navigate up or down within a screen or to a new screen.
	• Move between selections within a drop-down menu.
	• Increment or decrement the selected numerical field within a selection menu.

Table 5: Display Module Button Functions

Key	Function
Soft Key	Soft keys activate the mode or action represented by the icon above each button in the LCD. See Table 6 for soft key modes and actions.

Table 6: Display Soft Key Icons

Icon	Function
Depressurize	Depressurize relieves fluid pressure from the pump outlet to below the platen on the currently active ram.
	If system is pressurized, press button.
	• When prompted to depressurize the system, select ✓ or ⊗. ***Depressurizing the active ram will depressurize both rams.*** **NOTE:** If additional user-supplied check valves have been added to the system, only the active ram will be depressurized. You must perform manual crossover and select depressurize again to depressurize both rams. See **Crossover** section of this table on page 19.
	If system is depressurized, press button.
	• When prompted to pressurize the system, select ✓ or ⊗.
Pump Prime	Pump Prime • *Tandem ram:* if pump is off, activates the air solenoid on the active ram; • *Tandem ram:* if pump is on, activates the air solenoid on the inactive ram which enables you to purge air and prime the pump; • *Single ram:* activates air solenoid whether or not pump is on; • clears the Pump Not Primed deviation or alarm (depending on setup selection); and • resets the drum volume remaining to the drum fill volume setpoint for pump being primed.
	Press button.
	• When prompted to prime the ram, select ✓ to prime.
	Press button to exit Prime Mode or to reset counter to the prime time.
	• When prompted to exit Prime Mode, select ✓ to exit or ⊗ to reset prime counter.
Recirculate	Recirculate Mode pumps fluid from the drum, through the pump, and back into the drum on the currently active ram.
	Set motor air regulator to 30 psi (0.2 MPa, 2.1 bar) before pressing Recirculate key.
	If system is not in Recirculate Mode, press button.
	• When prompted to turn recirculation on, select ✓ or ⊗. Adjust motor air regulator to obtain desired flow rate.
	If system is in Recirculate Mode, press button.
	• When prompted to turn recirculation off, select ✓ or ⊗.

Table 6: Display Soft Key Icons

Icon	Function
Crossover	Crossover key transitions the active ram to inactive, and inactive ram to active. Available on Warm Melt Tandem Supply Systems only. **NOTE:** If an alarm is present on the inactive ram, crossover will not be successful. Manual crossover is disabled in single ram operation.
	Press button.
	• When prompted to initiate a crossover, select ✓ or ⊗.
Jump In	In screens that have editable fields, press to access the fields and make changes. See **Appendix A - User Interface Display**, page 31, for more information.

User Interface Display

NOTE: For details regarding the user interface display see Appendix A - User Interface Display, page 31.

Display Screen Components

The following figure calls out the navigational, status, and general informational components of each display screen.

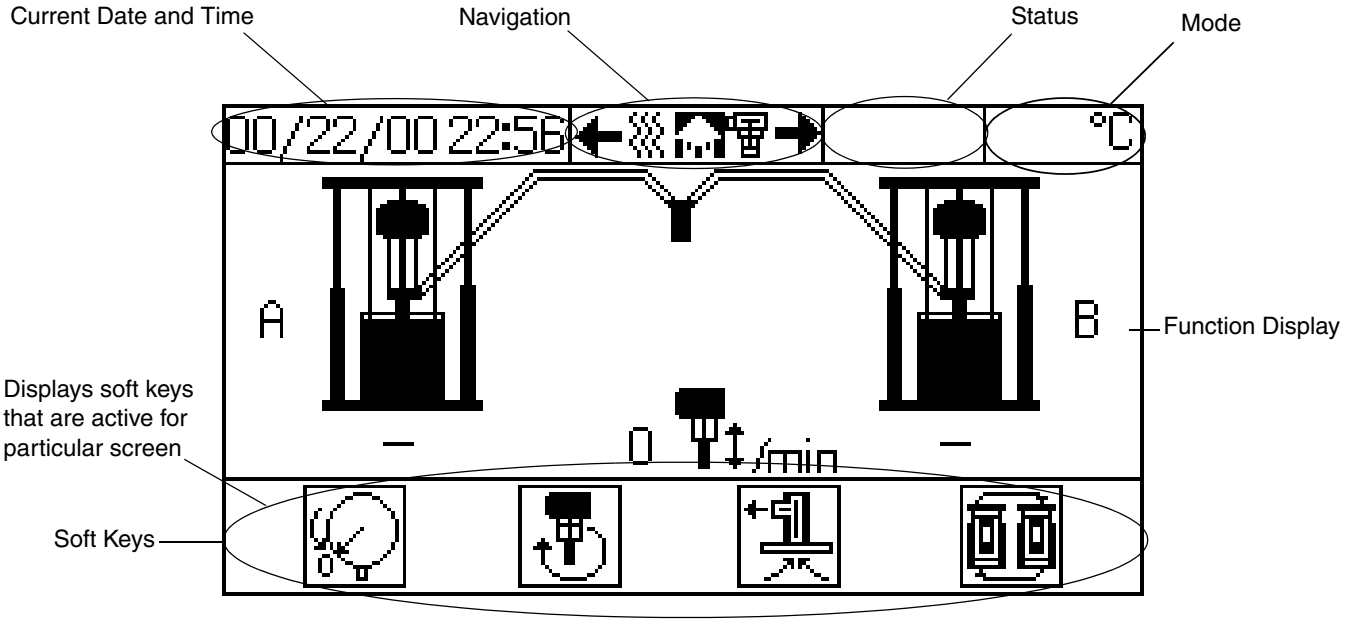

FIG. 5: Display Screen Components (example of tandem system)

Fluid Control Module

Table 7: Fluid Control Module Sensor Connections

Connection	Ram	Sensor Description
1	Ram A and Ram B	Air motor solenoid (white), light tower (green), drum low (yellow), drum empty (black)
2	Ram A	Light tower
3	Ram A + B	Fluid depressurize/recirculate solenoid
4	not used	not used
5	Ram A and Ram B	Air motor reed switch, sensors
6	not used	not used
7	Ram A	Filter pressure at inlet and outlet
CAN communication cable 1	Ram A	From Ram A Fluid Control Module to Display Module.
CAN communication cable 2	Ram A and Ram B	49 ft (15 m) from Ram A Fluid Control Module to Ram B Fluid Control Module.

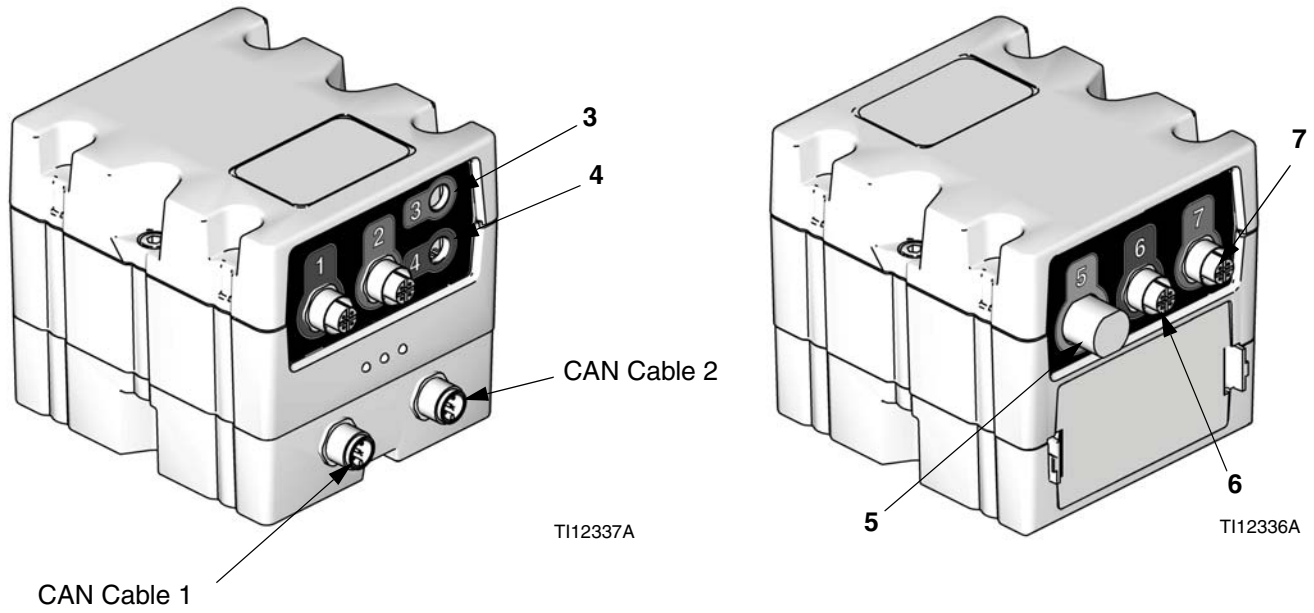

FIG. 6: Fluid Control Module Sensor Connections

Electronic Crossover Operation

NOTE:
These instructions are for the display module functions used on tandem systems. For basic ram and pump operation, refer to the component manuals supplied.

Pressure Relief Procedure

1. Lock the gun/valve trigger.

2. Press On/Off key . If system is On, display will highlight . Select to turn off.

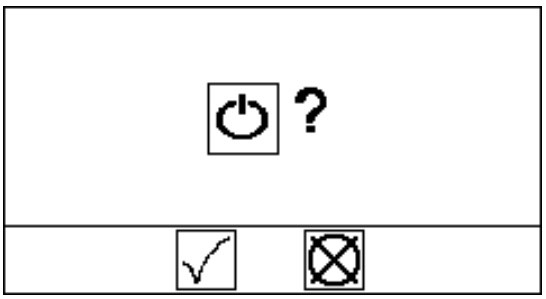

FIG. 7: System Function Screen

3. Turn off the air motor slider valve (BF) on both ram A and B.

4. On both ram A and B, turn off the main air slider valve (BA). Set the ram director valve (BC) to the down position. The ram will slowly drop.

5. Unlock the gun/valve trigger.

6. Hold a metal part of the gun/valve firmly to the side of a grounded metal pail, and trigger the gun/valve to relieve pressure.

7. Lock the gun/valve trigger.

8. On both ram A and B, open the fluid line drain valve and/or the pump bleed port. Have a container ready to catch the drainage.

If you suspect that the spray tip/nozzle or hose is completely clogged, or that pressure has not been fully relieved after following the steps above, very slowly loosen the tip guard retaining nut or hose end coupling and relieve pressure gradually, then loosen completely. Now clear the tip/nozzle or hose.

Flush Before Using Equipment

The pump was tested with lightweight oil, which is left in the fluid passages to protect parts. To avoid contaminating your fluid with oil, flush the pump with a compatible solvent before use. See your pump manual for flushing directions.

Startup

1. On both ram A and B, turn on the main air slider valve (BA). Set the ram director valve (BC) to the down position. The ram will slowly drop.

2. Turn on the air motor slider valve (BF) on both ram A and B.

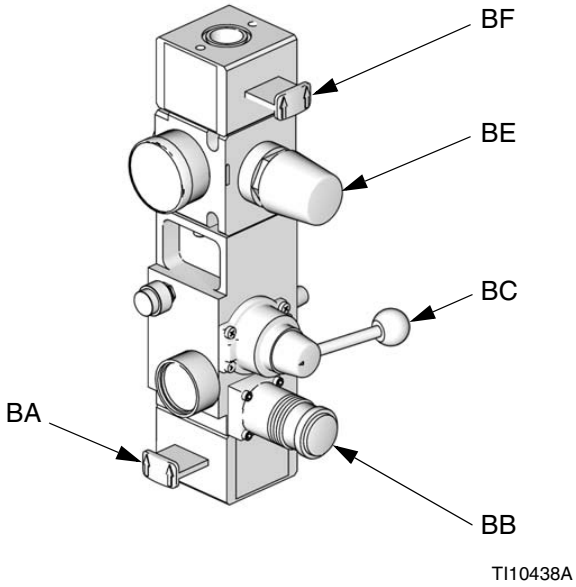

FIG. 8. Integrated Air Controls

3. Turn on the power on/off switch at the back of the power supply box on ram A. The Power Up screen will appear. See FIG. 9.

FIG. 9: Power Up Screen

4. Press On/Off key . If system is Off, press to turn the system on.

5. See FIG. 10. The Ram Operation screen displays which ram (A or B) is active and how much volume is remaining in each drum. The fluid line is shown filled indicating the system is on.

6. The air motor solenoid LED will illuminate.

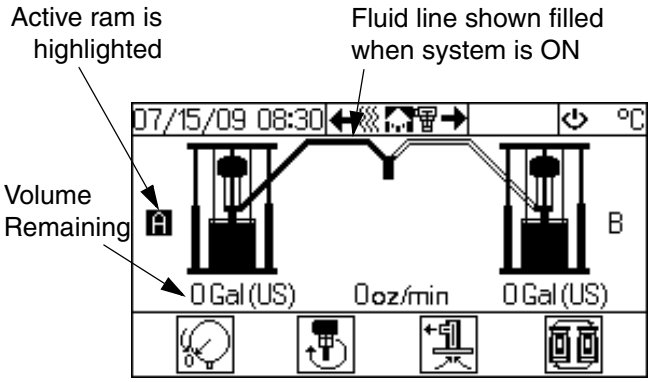

FIG. 10: Ram Operation Screen

Prime

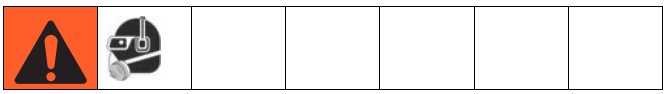

1. Make sure the system is at required temperature.
2. To prime the active ram, ensure that the system is on and not in Run Mode. To prime the inactive ram, ensure that the system is on and in Run Mode.

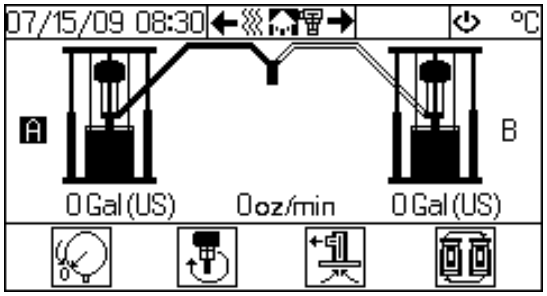

FIG. 11: Ram Operation Screen - Tandem System

3. If using a manual dispense valve, unlock the dispense valve trigger and place dispense valve over a waste container.
4. Press the Pump Prime key . The display prompts the operator to confirm. See FIG. 12. Select to begin prime.

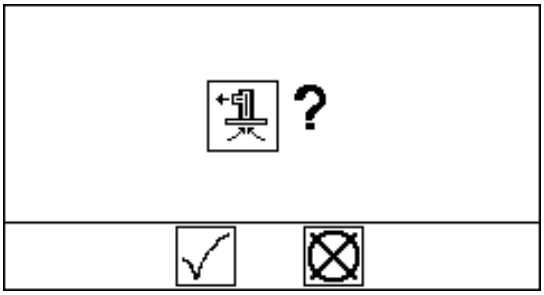

FIG. 12: Prime Confirmation

5. When the timer expires the air motor solenoid LED will turn off.
6. Prime the system until a smooth flow of material dispenses from the dispense valve.
7. Lock the dispense valve trigger lock.

NOTE: To exit Prime Mode before the timer expires, press the Pump Prime key . The display prompts the operator to confirm. See FIG. 13. Select to exit prime.

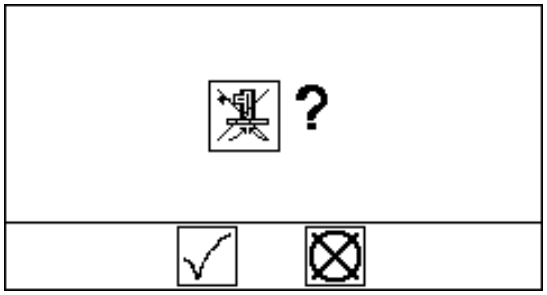

FIG. 13: Exit Prime Mode Confirmation

NOTE: To extend the prime time counter, select in FIG. 13. Display prompts operator to confirm. See FIG. 14. Select to reset.

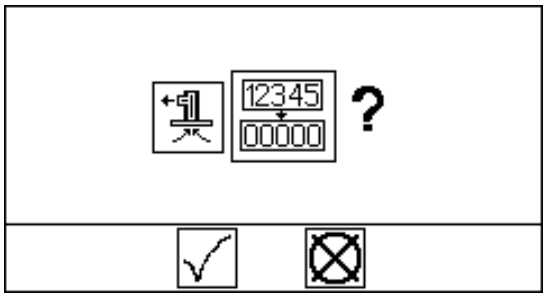

FIG. 14: Reset Prime Time Counter Confirmation

Automatic Crossover

Keep clear of the inactive ram, as automatic crossover may occur unexpectedly. To repair or adjust the ram, first follow all steps of the **Pressure Relief Procedure** on page 22.

The automatic crossover feature allows continuous flow and prevents system shutdown. If the active ram encounters a pump runaway, drum empty, or air solenoid disconnected alarm it will attempt an automatic crossover to the inactive ram.

The system will generate a crossover error if the active ram attempts an automatic crossover while the inactive ram has a pump runaway, drum empty, air solenoid disconnected, or not primed alarm.

Manual Crossover

Manual crossover can only be initiated if the following conditions are met:

- inactive ram is not in the drum empty error condition.
- pump runaway and not primed alarms do not exist.

To initiate a manual crossover to the inactive ram:

1. From the Ram Operation screen, press the Crossover key . The display prompts the operator to confirm.
2. Select to confirm manual crossover operation or select to cancel.

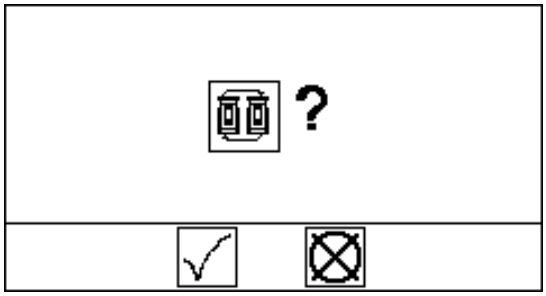

FIG. 15: Crossover Function Screen

NOTE: If the active ram has a pump runaway error or drum empty error, the system will attempt an automatic crossover.

Recirculate Function

Recirculate mode pumps fluid from the drum, through the pump, and back into the drum on the currently active ram.

To enter Recirculate mode:

1. Set the motor air regulator to 30 psi (0.2 MPa, 2.1 bar).
2. From the Ram Operation screen, press the Recirculate key . The display prompts the operator to confirm.
3. Select to confirm recirculation or select to cancel.

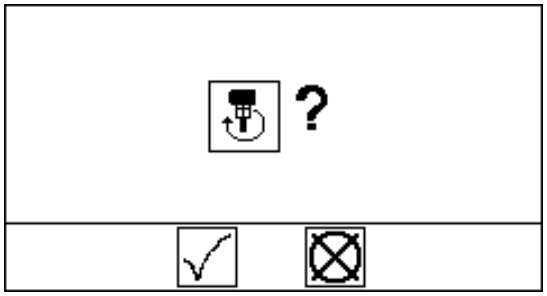

FIG. 16: Enter Recirculate Mode

4. Adjust motor air regulator to obtain desired flow rate.

NOTE:
While in Recirculate Mode, the manual crossover function cannot be used and the inactive ram cannot be primed.

To exit Recirculate Mode, press the Recirculate key . The display prompts the operator to confirm. Select to confirm or select to cancel. See FIG. 16.

NOTE:
You must exit Recirculate Mode before depressurizing or initiating a crossover.

Depressurize Function

Follow the **Pressure Relief Procedure** on page 22. Shutting off power or removing power from the system will not depressurize the system.

When the system is pressurized the depressurize function relieves fluid pressure from the pump outlet to below the platen on the currently active ram. However, when the system is depressurized pressing the depressurize key will restore fluid pressure.

Depressurize System

From the Ram Operation screen, press the Depressurize key . The display prompts the operator to confirm. Select to confirm depressurize or select to cancel.

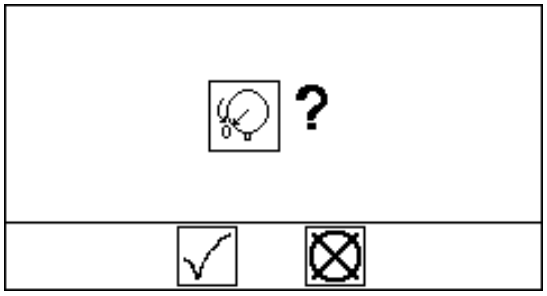

FIG. 17: Depressurize Function Screen

Shutdown

Turning the system OFF relieves pressure from the pump motor. It does not depressurize the fluid pressure. Follow the **Pressure Relief Procedure**, page 22.

Follow the procedure below for normal system shut down, such as at the end of the work day.

NOTE:
The ram up/down and blowoff air is independent of the electronic controls and can be operated anytime the main air slider valve is open and air pressure is available.

1. Press ⏻ while in the Ram Operation screen to turn off the air motor. Select ✓ to confirm.
2. Press ⏻ while in the Heater Run screen to turn off the heaters. Select ✓ to confirm.
3. Follow the **Pressure Relief Procedure**, page 22.

Alarms

Supply system alarms alert you to a problem and help prevent system shutdown or application errors. If an alarm occurs, operation may stop and the following occurs.

- Light tower indication changes (if equipped)
- Status bar on the display shows the alarm description

Diagnose Alarms

See **Alarm Codes and Troubleshooting**, page 28, for causes and solutions to each alarm code.

Clear Alarms

Alarms are cleared by the solution(s) listed in the following table or from the screen in which they appear. Refer to **Alarm Codes and Troubleshooting**, page 28, for details.

Alarm Codes and Troubleshooting

Alarm Code	Alarm Problem	Cause	Solution	Clear Alarm
Fluid Control Module				
CB1X	A - Communication Error - Ram A Not Found	Ram cannot communicate with FCM A.	Verify that power is supplied.	Alarm automatically cleared by solution.
			Check that CAN cables are connected.	
			Verify that selector switch is set correctly.	
			Replace FCM A.	
CB2X	B - Communication Error - Ram B Not Found	Ram cannot communicate with FCM B.	Verify that power is supplied.	Alarm automatically cleared by solution.
			Check that CAN cables are connected.	
			Verify that selector switch is set correctly.	
			Replace FCM B	
B61X B62X	Crossover Error (Ram A) Crossover Error (Ram B)	Inactive ram has a Not Primed alarm.	Set inactive ram to Prime mode to automatically clear alarm.	Cleared from Ram Alarm screen. See **Appendix A - User Interface Display**, page 31.
		There is a Runaway alarm	Correct runaway condition and clear alarm on Status screen 1.	
		There is a Drum Empty alarm.	Replace empty drum with full drum to clear.	

Alarm Code	Alarm Problem	Cause	Solution	Clear Alarm
Fluid Control Module (continued)				
DA1X DA2X	Pump Runaway A Pump Runaway B	Pump is running faster than set runaway limit due to: • Increased air pressure. • Increased fluid output. • Exhausted fluid supply. • Open fitting, hose, drain, or bleed valve.	Correct runaway condition and clear alarm.	Cleared from Ram Alarm screen. See **Appendix A - User Interface Display**, page 31.
L11X L12X	A - Drum Empty B - Drum Empty	Drum empty sensor has been activated.	Replace empty drum with full drum to clear.	Alarm automatically cleared by solution.
DB1X DB2X	A - Not Primed B - Not Primed	The pump is not primed.	Set ram to Prime mode to automatically clear alarm, or manually clear alarm from Ram Alarm screen.	Cleared from Ram Alarm screen or Ram Operation screen. See **Appendix A - User Interface Display**, page 31.
WJ1X	A - Air Solenoid Disconnected	Solenoid unplugged.	Check that solenoid cable is connected.	Alarm automatically cleared by solution.
WJ2X	B - Air Solenoid Disconnected	Damaged solenoid / wires.	Inspect solenoid wires for damage.	Alarm automatically cleared by solution.
DK1X DK2X	A - Air Motor Sensor Error B - Air Motor Sensor Error	System has seen multiple up strokes without a down stroke, or multiple down strokes without an up stroke.	See air motor manual.	Cleared from Ram Alarm screen. See **Appendix A - User Interface Display**, page 31.
		Damaged or disconnected air motor sensors.	Check that air motor sensors are connected.	
			Inspect air motor sensor harness for damage.	
L21X L22X	A - Drum Low Deviation B - Drum Low Deviation	Drum low sensor has been activated.	Replace empty drum with full drum to clear.	Deviation automatically cleared by solution.
WK1X	A - Fluid Solenoid Disconnected Deviation	Solenoid unplugged.	Check that solenoid cable is connected.	Deviation automatically cleared by solution.
WK2X	B - Fluid Solenoid Disconnected Deviation	Damaged solenoid wires.	Inspect solenoid cable for damage.	
ML1X ML2X	A - Rebuild Platen Seals B - Rebuild Platen Seals	Counter has reached programmed platen maintenance interval.	Perform platen maintenance; see Supply Systems Repair-Parts manual.	Cleared from Maintenance screen. See **Appendix A - User Interface Display**, page 31.
MA1X MA2X	A - Rebuild Pump B - Rebuild Pump	Counter has reached programmed pump maintenance interval.	Perform pump maintenance. See Check-Mate Displacement Pump manual.	Cleared from Maintenance screen. See **Appendix A - User Interface Display**, page 31.

Alarm Code	Alarm Problem	Cause	Solution	Clear Alarm
Fluid Control Module (continued)				
DD1X DD2X	A - Pump Diving B - Pump Diving	Pump leak.	Worn valve or packings. See Check-Mate Displacement Pump manual.	Cleared from Ram Alarm screen. See **Appendix A - User Interface Display**, page 31.
		Ram air pressure set too low.	Increase air pressure to ram until diving stops.	
		Material flow rate exceeds ability of ram to feed pump.	Decrease pump air pressure to slow cycle rate. Decrease pressure until diving stops.	
001X 002X	A - Platen Seals Maintenance Reset or A- Pump Maintenance Reset B - Platen Seals Maintenance Reset or B- Pump Maintenance Reset	Reminder when maintenance counter was last reset.	Reset on Maintenance Screen 2.	Cleared when reset from Maintenance Screen 2.
MGDX	Filter Pressure Drop Low	Pressure drop from filter inlet to outlet is below minimum drop setpoint for 10 consecutive cycles. Filter element has collapsed or is not present.	Replace filter element.	Cleared when reset from Status Screen 2.
	Filter Pressure Drop High	Pressure drop from filter inlet to outlet is above maximum drop setpoint for 10 consecutive cycles. Filter is clogged.	Remove and clean filter.	Cleared when reset from Status Screen 2.

Appendix A - User Interface Display

Display Overview

The user interface display is divided into two main functions: Setup mode and Run mode.

Setup Mode Functions

The setup mode functions enable users to:

- set and change the password;
- configure system parameters;
- set heat zone parameters;
- schedule maintenance parameters;
- configure system hardware settings;
- set and change display units and format for all other screens;
- set pump size and drum fill volume;
- and view software information for each system component.

Run Mode Functions

The run mode functions enable users to:

- view current flow rate and drum volume;
- view temperature for heat zones;
- view system job totals and grand totals, and reset totals;
- view current pressures;
- view and reset maintenance counters;
- view and clear individual alarms;
- and view the alarm log.

Display Details

Power Up Screen

The following screen appears when the display module is powered up. It remains on while the display module runs through initialization and establishes communication with other components in the system.

FIG. 18: Power Up Screen

Menu Bar

The menu bar appears at the top of the screen, and consists of the following components.

FIG. 19: Menu Bar

Date and Time

The date and time are always displayed in one of the following formats. The time is always displayed as a 24-hour clock.

- DD/MM/YY HH:MM
- MM/DD/YY HH:MM

Navigation

The navigation section, which is to the right of the date and time, indicates the active screen with the center, highlighted icon. The left and right arrows indicate there are more screens that can be accessed within a mode.

Status

The current system status is displayed on the right of the menu bar. If there is an error, an event icon and either a text description of the event or the standard error code for the event is displayed. If there are no errors or deviations, nothing is displayed.

Mode

The mode section displays the current system mode. The current mode is highlighted.

Error

The current system error is displayed in the menu bar. There are four possibilities:

Icon	Function
No Icon	No information or no error has occurred
	Advisory
	Deviation
	Alarm

Soft Keys

Icons above the soft keys indicate which mode or action is associated with each soft key. Soft keys that do not have an icon above them are not active in the current screen.

Jump In/Jump Out

In screens that have editable fields, press to access the fields and make changes. When changes are complete press to exit edit mode.

Navigation within Screens

Press to open drop-down menus on Setup screens. Also, press to enter changes or make a selection.

Press to navigate to new screens and to navigate left and right within a screen. Also press select digits within a field to change.

Press to navigate to new screens and to navigate up and down within a screen. Also press to move between fields within a drop-down menu, and to increment or decrement numbers within a field.

Setup Mode Screens

Setup mode screens are divided into six sections: password, system setup, heat zone setup, maintenance setup, hardware setup, and advanced setup.

Password Screen

While in Run mode, press the Setup button. If the password is not set to 0000, the Password screen will appear. Enter the password to continue to Setup mode.

NOTE: Upon the first system startup, the System Setup screen will display. Otherwise, the last setup screen viewed will display.

Set Password

To set the password, press to enter the screen.

Press to select digit to change. Press to set value for each digit. Press again to enter the password.

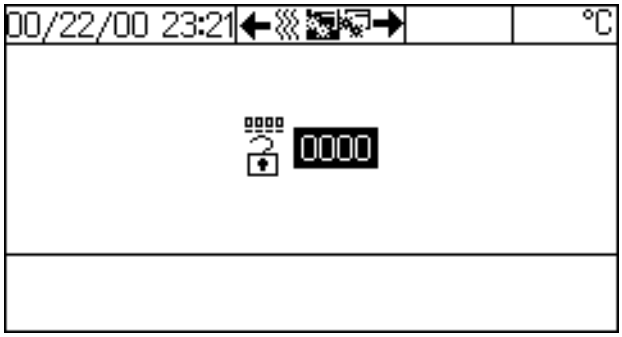

FIG. 20: Password Screen

System Setup

The System Setup screen enables users to configure system settings for the ram(s). Press to access the fields and make changes. Press to exit edit mode.

Icon	Function
	Select tandem operation, ram A only operation, or ram B only operation.
	Select if a Not Primed event will issue an alarm or deviation.
	Set number of minutes (1-9) for priming.
	Set pump cycles per minute that will issue a pump runaway alarm. Set between 0 and 99; default setting is 60 cycles; 00 setting disables this function.

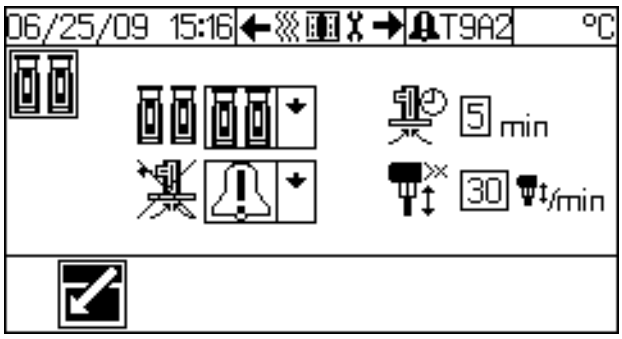

FIG. 21: System Setup

Maintenance Setup Screen

The Maintenance Setup screen enables users to set maintenance intervals for rebuilding platen seals and rebuilding the pump.

Icon	Function
	Set the number of drums (0-9999) between platen seal maintenance. Setting the number of pump cycles to 0 disables this function. If using a tandem system, set for each ram. A rebuild platen seals error is issued when maintenance is required. See **Alarm Codes and Troubleshooting** on page 28.
	Set the number of pump cycles (0-9999) between pump maintenance. Setting the number of pump cycles to 0 disables this function. If using a tandem system, set for each pump. A rebuild pump error is issued when maintenance is required. See **Alarm Codes and Troubleshooting** on page 28.

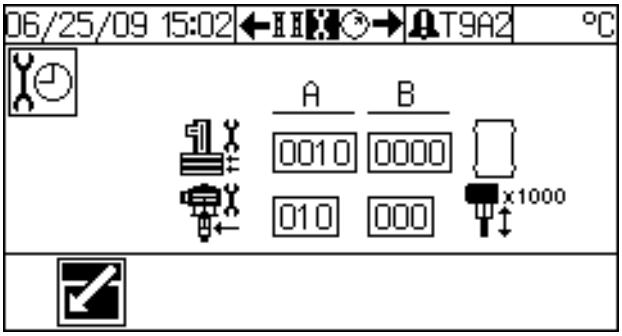

FIG. 22: Maintenance Setup

Hardware Setup Screens

The Hardware Setup screens enable users to specify if specific hardware is installed on the system and to adjust hardware settings. Press to scroll through the Hardware Setup screens. Once in the desired Hardware Setup screen, press to access the fields to make changes. Press to exit edit mode.

NOTE: Must exit edit mode to scroll through the Hardware Setup screens.

Hardware Setup Screen 1

This screen enables users to specify if a fluid filter monitor is installed, and set the high and low limits for the pressure drop across the filter.

Icon	Function
	Select what type of error will be issued if filter pressure drops below the low limit or raises above the high limit. Select to disable filter monitoring or if there is no filter installed on the system.
	Set low limit (0-1000 psi) for pressure drop that will issue an error. Set the low limit to detect a filter element collapse or a missing element.
	Set high limit (0-5000 psi) for pressure drop that will issue an error. Set the high limit to detect a clogged filter.

Monitor the filter pressure readings through the normal range of flow with a clean filter to establish the initial limit settings.

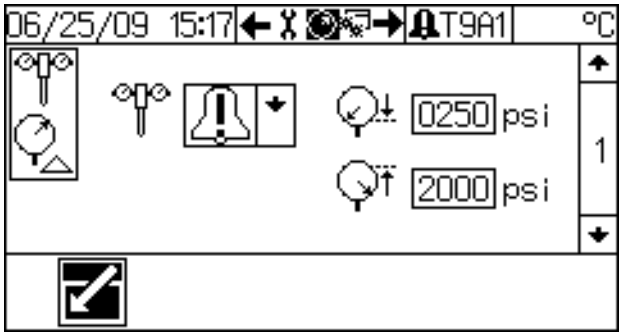

FIG. 23: Hardware Setup Screen 1 (Filter)

Hardware Setup Screen 2

This screen enables users to specify if a fluid solenoid is installed, and if a drum low sensor is installed. The fluid solenoid controls the depressurize/recirculate valve.

Icon	Function
	Select if fluid solenoid is installed on system. Set for A and B rams.
	Select if drum low sensor is installed on system. Set for A and B rams.

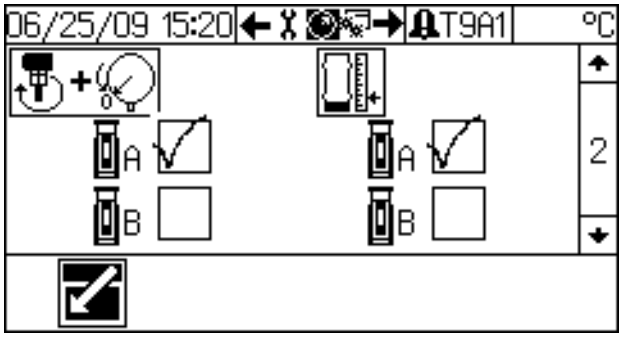

FIG. 24: Hardware Setup Screen 2

Advanced Setup Screens

The Advanced Setup screens enable users to set units, adjust values, set formats, and view software information for each component. Press to scroll through the Advanced Setup screens. Once in the desired Advanced Setup screen, press to access the fields to make changes. Press to exit edit mode.

NOTE: Must exit edit mode to scroll through the Advanced Setup screens.

Advanced Setup Screen 1

This screen enables users to set units that display on other screens.

NOTE: On two-zone and four-zone enclosure accessory kit, only and settings are available.

Icon	Function
	Select units of measurement for volume. Select between cycles/gal. gal., oz., and liters/cc.
	Set units of measurement for maintenance intervals. Select between 1000 cycles, drums, gal., and liters.
	Set units of measurement for pressure. Select between psi and bar.
	Set the password. Use digits 0-9999; 0000 = no password.

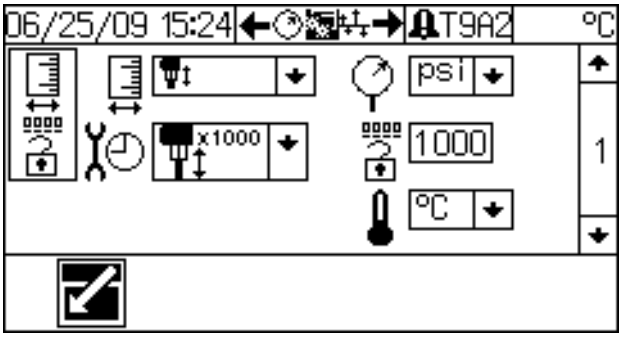

FIG. 25: Advanced Setup Screen 1

Advanced Setup Screen 2

This screen enables users to set the pump size (in cc/cycle) and the drum fill volume (in volume units). The drum fill volume is the amount of material in a new drum, which is used to calculate the volume of material remaining during operation.

NOTE: These values must be entered accurately for the volume remaining estimates on the Ram Operation screen to be accurate.

Icon	Function
	Set pump size (cc/cycle) for each ram. **Check-Mate:** Select between 60, 100, 200, 250, and 500. **Dura-Flo:** Select between 145, 180, 220, 290, 430, 580, and 1000.
	Set fill volume for each drum. Use digits 1-9999.
Check -Mate / Dura-Flo	Change between a Check-Mate or Dura-Flo pump.

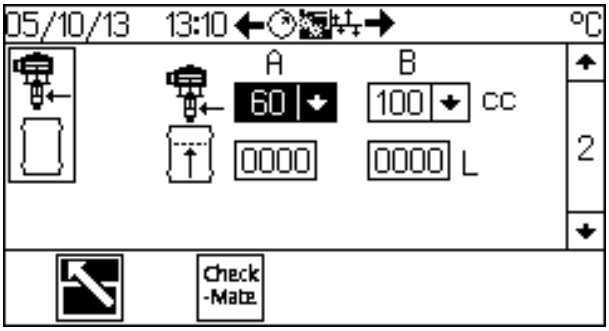

FIG. 26: Advanced Setup Screen 2

Advanced Setup Screen 3

This screen enables users to set the date, time, and date format.

Icon	Function
	Set date format. Select between MM-DD-YYYY and DD-MM-YYYY.
	Set current date.
	Set current time.

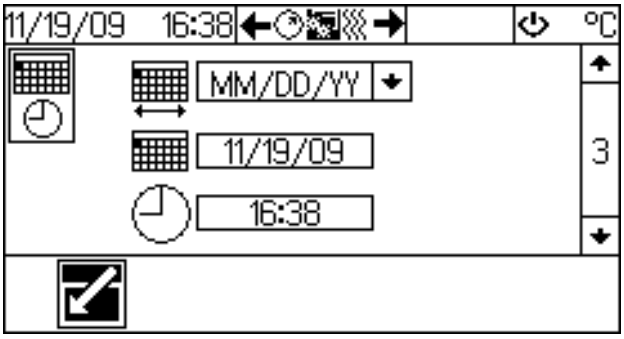

FIG. 27: Advanced Setup Screen 3

Advanced Setup Screens 4 and 5

These screens display the software part number and version information for the system components. Only system components that are detected via the system data bus will be displayed on these screens.

Icon	Function
	Controller software part number and version.
	Display software part number and version.
	Fieldbus gateway software part number and version.
	Temperature controller software part number and version.

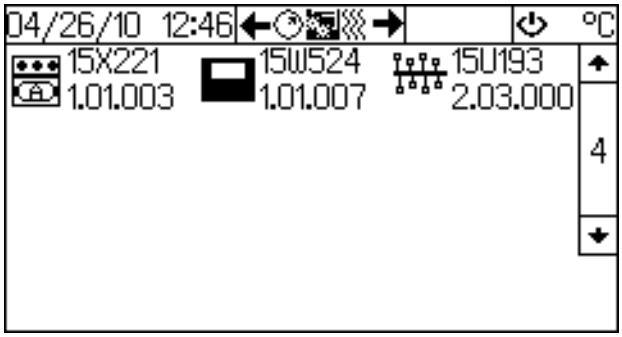

FIG. 28: Advanced Setup Screens 4 and 5

Run Mode Screens

Run mode screens are divided into six sections: ram operation, heat zone operation, current system status, preventative maintenance schedule, current alarms, and error reports. The system starts in Run mode. If the system is in Setup mode, press to enter Run mode.

Ram Operation Screen

The Ram Operation screen displays which ram (A or B) is active, and how much volume remains in each drum. This screen also displays the flow rate of the active ram. When the fluid line is shown filled the system is on.

Depending on the current system status, users can perform the following procedures from the Ram Operation screen:

- turn the air motor on and off;
- depressurize and pressurize the system;
- recirculate fluid within the active ram;
- prime the pump(s);
- and perform a manual crossover on tandem systems.

See **Electronic Crossover Operation**, page 22, for instructions on all of these procedures.

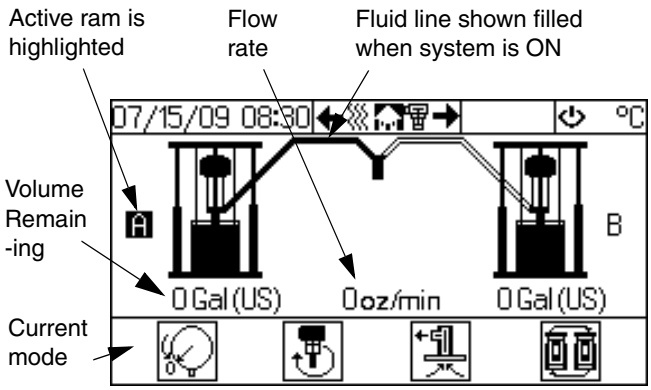

FIG. 29: Ram Operation Screen - Tandem System

The Ram Operation screen will display the appropriate icon and highlight the corresponding soft key if the system is:

- depressurized ,
- in Recirculate mode ,
- or if a ram is in Prime mode .

Status Screen

This screen displays the job totals and grand totals. If there is a filter or an error issued, there will be additional screens. Press to scroll to through the Status screens.

NOTE: If an alarm is issued, the Alarm screen will be the first status screen shown.

Icon	Function
A↔B 12345	Job total column; indicates pump cycle count total for a single job.
A↔B 1234567	Grand total column; indicates pump cycle count total for all jobs.
A	Displays pump cycle count for Ram A for a single job and all jobs.
B	Displays pump cycle count for Ram B for a single job and all jobs.
+	Displays pump cycle count for entire system for a single job and all jobs.

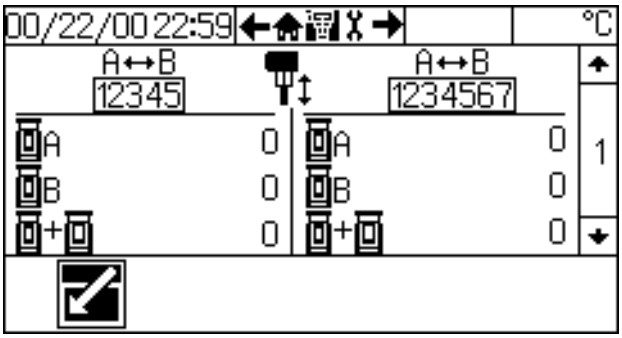

FIG. 30: Status Screen 1

To reset a job total for a single ram (A or B), press to access the fields, navigate to the value, and press . When prompted, press to confirm. If the job total is reset, A and B totals will also be reset. Press to exit edit mode.

NOTE: Grand totals cannot be reset.

Alarm Screen

The alarm screens display the type of alarm currently occurring on each ram. Once an alarm is resolved, use this screen to clear the alarm.

NOTE: For more information regarding alarms. See Alarms on page 28.

Icon	Alarm Code	Function
	B61X B62X	Crossover Error A crossover to a pump with an error was attempted.
/min	DA1X DA2X	Pump Runaway Pump is running faster than the runaway limit.
	DB1X DB2X	Pump Not Primed A new drum has not been primed.
	DK1X KD2X	Air Motor Sensor Error Air motor sensor detects a fault in the pump motion.
	DD1X DD2X	Pump Diving Pump leak or ram air pressure is too low.
	L11X L12X	Drum Empty Drum for ram A or ram B is empty.

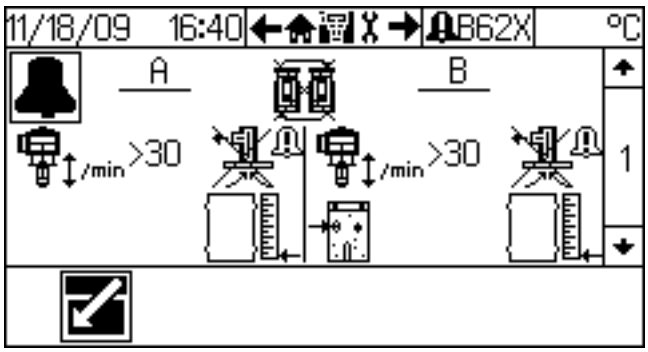

FIG. 31: Ram Alarm Screen

To clear an alarm, press to access the fields, navigate to the alarm icon, and press . When prompted, press to confirm. Press to exit edit mode.

Maintenance Screen

The maintenance screen enables operators to establish a preventive maintenance schedule based on the system application and repair history. This screen displays the number of maintenance units remaining before preventive maintenance is due for the platen seals and pump.

NOTE: If a maintenance interval is set to 0, the display will be a dash.

Icon	Function
	Current count remaining until platen requires maintenance. Platen maintenance is reported in drums .
	Current count remaining until pump requires maintenance. Pump maintenance is reported in units set by the maintenance unit control in the Advanced Setup screen 1. The example shown in FIG. 32 is set to units of 1000 pump cycles x1000 .

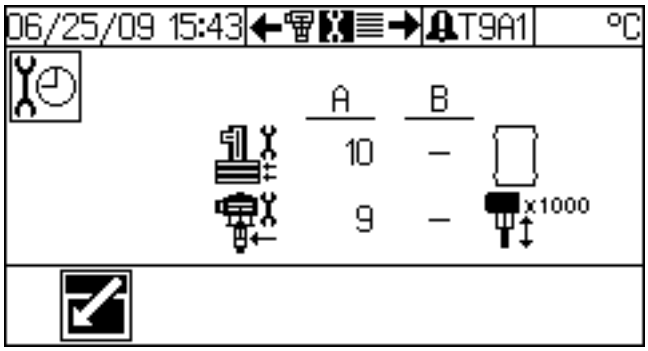

FIG. 32: Maintenance Screen

To reset a counter, press to access the fields, navigate to the value, and press . When prompted, press to confirm. Press to exit edit mode.

Filter Screen

NOTE: The filter screen is only available if the fluid filter option is enabled. See Hardware Setup Screen 2, page 35.

This screen displays the fluid filter inlet pressure, outlet pressure, and the differential pressure across the filter.

Icon	Function
	Fluid filter inlet pressure.
	Fluid filter outlet pressure.
	Differential pressure across the fluid filter.

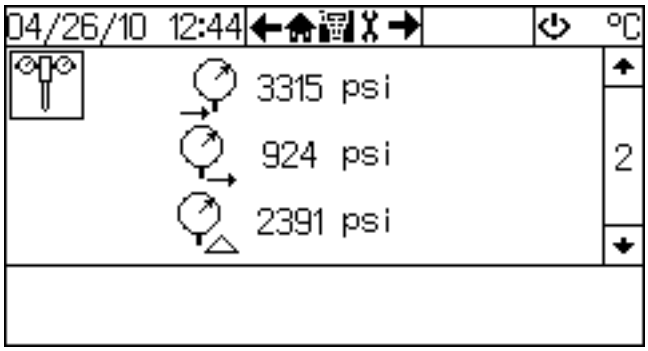

FIG. 33: Fluid Filter Screen

Over or Under Pressure Alarm

If the differential pressure measured across the fluid filter for at least five strokes is greater than the high limit or less than the low limit value set in the **Hardware Setup Screen 1**, and alarm or deviation is indicated; see FIG. 34. Whether an alarm or deviation is issued depends on the error type set in the **Hardware Setup Screen 1**.

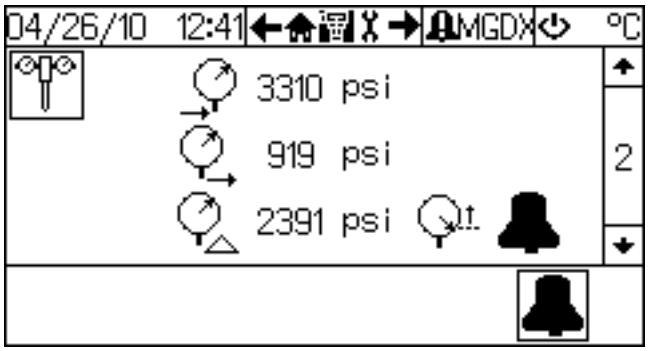

FIG. 34: Fluid Filter Screen with Alarm

To clear a filter alarm or deviation, press from the fluid filter screen. Then press on the confirmation screen.

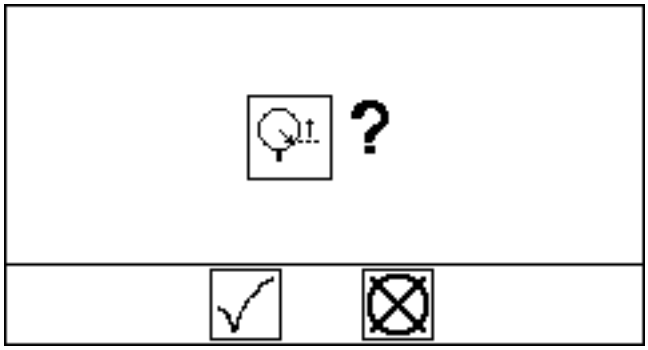

FIG. 35: Fluid Filter Screen with Alarm

Report Screens

The five report screens display a chronological list of the most recent 20 errors. See **Alarm Codes and Trouble-shooting**, page 28, for details regarding each alarm code.

Icon	Function
#	Chronological order of errors as they occur.
	Date when error occurred.
	Time when error occurred.
	Error code.

Press ↑ ↓ to scroll to through the five report screens.

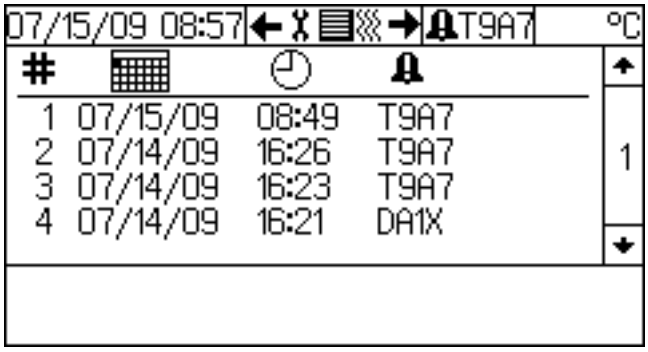

FIG. 36: Report Screen

Fluid Filter Kit Dimensions

NOTE:
Refer to the Related Manuals list on page 3 to find the correct manuals that list the dimensions of the rams, pumps, and other components.

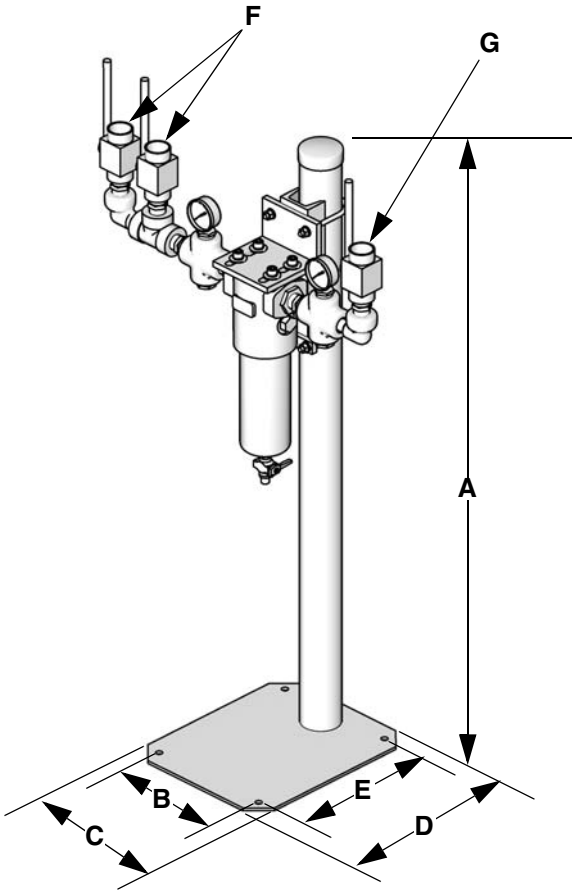

TI11158A

Key

A	52.25 in. (1327 mm)
B	11 in. (279 mm)
C	14 in. (356 mm)
D	17 in. (432 mm)
E	14. in. (356 mm)
F (fluid inlets)	1 in. npt(f)
G (fluid outlet)	1 in. npt(f)

Filter Element Mesh Sizes

Part No.	Mesh
515219	60
515220	50
515221	40
515222	30 (standard)

Technical Data

Max air input pressure (supply system)	psi (MPa, bar) / Air inlet size
S20 - 3 in. single post, 5 gal. (20 L)	125 psi (0.9 MPa, 9 bar) / 1/2 npt(f)
D60 - 3 in. dual post, 16 gal. (60 L), 5 gal. (20 L), 30 gal. (115 L)	150 psi (1.0 MPa, 10 bar) / 3/4 npt(f)
D200 - 3 in. dual post, 55 gal. (200 L), 30 gal. (115 L), 16 gal. (60 L), 8 gal. (30 L), 5 gal. (20 L)	150 psi (1.0 MPa, 10 bar) / 3/4 npt(f)
D200s - 6.5 in. dual post, 55 gal. (200 L), 30 gal. (115 L)	125 psi (0.9 MPa, 9 bar) / 3/4 npt(f)
Max fluid, air working pressure, and weight (displacement pump)	For Check-Mate pump packages, see manual 312376. For Dura-Flo pump packages, see manuals 311826, 311828, 311833.
Pump Wetted parts	For Check-Mate displacement pumps, see manual 312375. For Dura-Flo displacement pumps, see manuals 311717, 311825, 311827.
Platen/Ram Codes (page 5): Part number, size, platen; Wetted parts	
A, B, C, F, G, H: 255662, 55 gal. (200 L)	PTFE, EPDM, PTFE coated aluminum, zinc plated carbon steel, 316 sst
J, L, M, R, S, T: 255663, 55 gal. (200 L)	EPDM, aluminum, zinc plated carbon steel, 316 sst
4: 255661, 30 gal. (115 L)	zinc plated carbon steel, EPDM, sst, fluoroelastomer
2: 257728, 5 gal. (20 L)	Electroless nickel, polyurethane, carbon steel, polyethylene, nitrile, zinc plated carbon steel, buna, 316 sst 17-4PH sst
1, 3: 257729, 5 gal. (20 L) **D, E:** 257734, 8 gal. (30 L) **U, V, W:** 257738, 16 gal. (60 L)	Stainless steel, polyurethane, PTFE coated nitrile, polyethylene, nitrile, PTFE, 303 sst, 304 sst, 316 sst, 17-4PH sst
6, 7, 8, 9: 257731, 5 gal. (20 L) **K, N, P:** 257736, 8 gal. (30 L) **X, Y, Z:** 257741, 16 gal. (60 L)	Electroless nickel, aramind reinforced elastomer, rubber-based PSA, polyurethane, polyethylene, nitrile, zinc plated carbon steel, buna, 1018 carbon steel, 304 sst, 316 sst, 17-4PH sst
Ambient operating temperature range (supply system)	32-120 °F (0- 49°C)
Sound data	See separate air motor manual.
External power supply requirements (DatraTrak)	
AC power units	100-240 Vac, 50/60 Hz, single phase, 1.2 amps max draw
DC power units	24 Vdc, 1.2 amps max draw

Graco Standard Warranty

Graco warrants all equipment referenced in this document which is manufactured by Graco and bearing its name to be free from defects in material and workmanship on the date of sale to the original purchaser for use. With the exception of any special, extended, or limited warranty published by Graco, Graco will, for a period of twelve months from the date of sale, repair or replace any part of the equipment determined by Graco to be defective. This warranty applies only when the equipment is installed, operated and maintained in accordance with Graco's written recommendations.

This warranty does not cover, and Graco shall not be liable for general wear and tear, or any malfunction, damage or wear caused by faulty installation, misapplication, abrasion, corrosion, inadequate or improper maintenance, negligence, accident, tampering, or substitution of non-Graco component parts. Nor shall Graco be liable for malfunction, damage or wear caused by the incompatibility of Graco equipment with structures, accessories, equipment or materials not supplied by Graco, or the improper design, manufacture, installation, operation or maintenance of structures, accessories, equipment or materials not supplied by Graco.

This warranty is conditioned upon the prepaid return of the equipment claimed to be defective to an authorized Graco distributor for verification of the claimed defect. If the claimed defect is verified, Graco will repair or replace free of charge any defective parts. The equipment will be returned to the original purchaser transportation prepaid. If inspection of the equipment does not disclose any defect in material or workmanship, repairs will be made at a reasonable charge, which charges may include the costs of parts, labor, and transportation.

THIS WARRANTY IS EXCLUSIVE, AND IS IN LIEU OF ANY OTHER WARRANTIES, EXPRESS OR IMPLIED, INCLUDING BUT NOT LIMITED TO WARRANTY OF MERCHANTABILITY OR WARRANTY OF FITNESS FOR A PARTICULAR PURPOSE.

Graco's sole obligation and buyer's sole remedy for any breach of warranty shall be as set forth above. The buyer agrees that no other remedy (including, but not limited to, incidental or consequential damages for lost profits, lost sales, injury to person or property, or any other incidental or consequential loss) shall be available. Any action for breach of warranty must be brought within two (2) years of the date of sale.

GRACO MAKES NO WARRANTY, AND DISCLAIMS ALL IMPLIED WARRANTIES OF MERCHANTABILITY AND FITNESS FOR A PARTICULAR PURPOSE, IN CONNECTION WITH ACCESSORIES, EQUIPMENT, MATERIALS OR COMPONENTS SOLD BUT NOT MANUFACTURED BY GRACO. These items sold, but not manufactured by Graco (such as electric motors, switches, hose, etc.), are subject to the warranty, if any, of their manufacturer. Graco will provide purchaser with reasonable assistance in making any claim for breach of these warranties.

In no event will Graco be liable for indirect, incidental, special or consequential damages resulting from Graco supplying equipment hereunder, or the furnishing, performance, or use of any products or other goods sold hereto, whether due to a breach of contract, breach of warranty, the negligence of Graco, or otherwise.

FOR GRACO CANADA CUSTOMERS
The Parties acknowledge that they have required that the present document, as well as all documents, notices and legal proceedings entered into, given or instituted pursuant hereto or relating directly or indirectly hereto, be drawn up in English. Les parties reconnaissent avoir convenu que la rédaction du présente document sera en Anglais, ainsi que tous documents, avis et procédures judiciaires exécutés, donnés ou intentés, à la suite de ou en rapport, directement ou indirectement, avec les procédures concernées.

Graco Information

For the latest information about Graco products, visit www.graco.com.

TO PLACE AN ORDER, contact your Graco distributor or call to identify the nearest distributor.
Phone: 612-623-6921 **or Toll Free:** 1-800-328-0211 **Fax:** 612-378-3505

All written and visual data contained in this document reflects the latest product information available at the time of publication. Graco reserves the right to make changes at any time without notice.

For patent information, see www.graco.com/patents.

Original instructions. This manual contains English. MM 313528

Graco Headquarters: Minneapolis
International Offices: Belgium, China, Japan, Korea

GRACO INC. AND SUBSIDIARIES • P.O. BOX 1441 • MINNEAPOLIS MN 55440-1441 • USA
Copyright 2009, Graco Inc. All Graco manufacturing locations are registered to ISO 9001.
www.graco.com
Revised June 2013